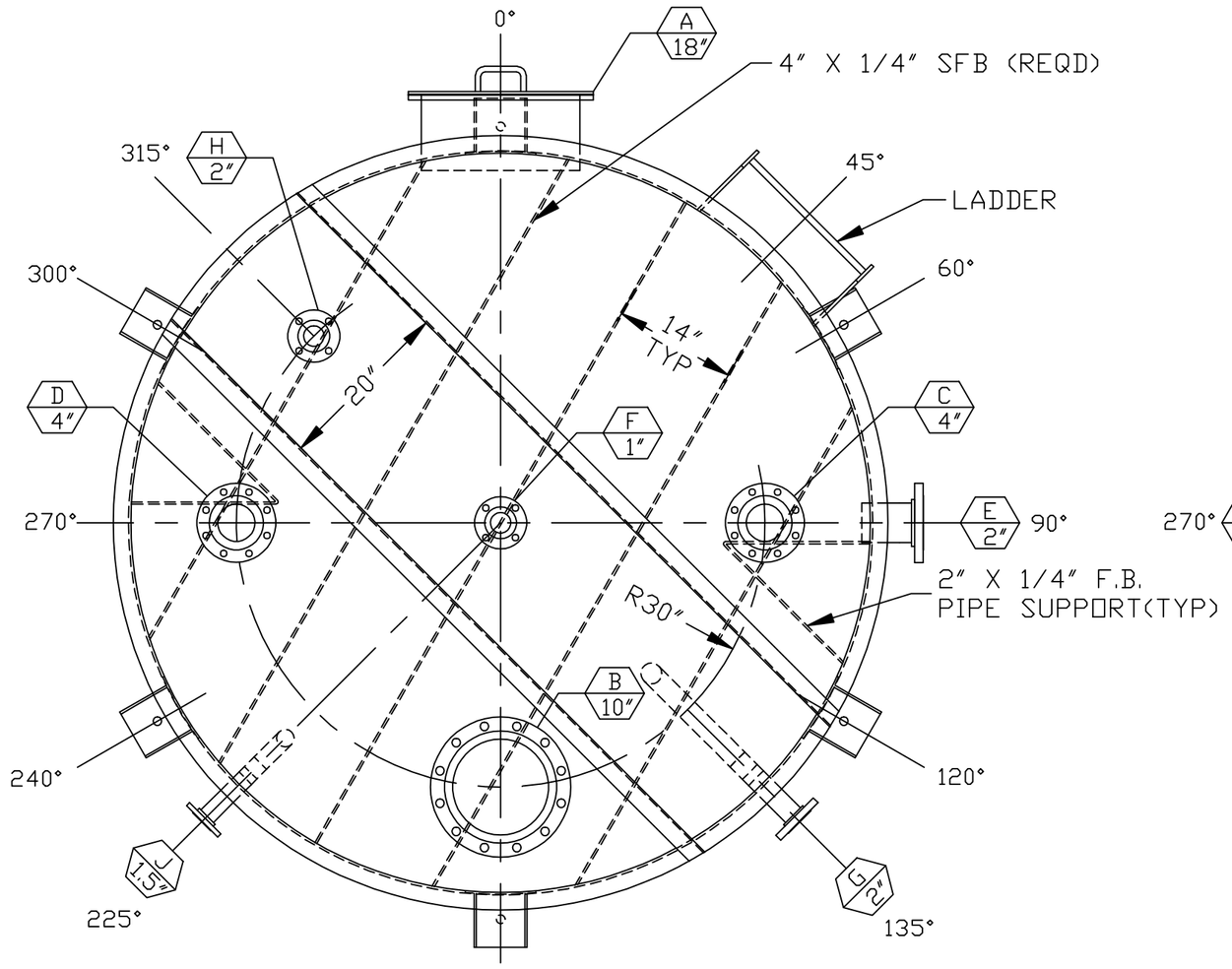

TANK ID TK-9

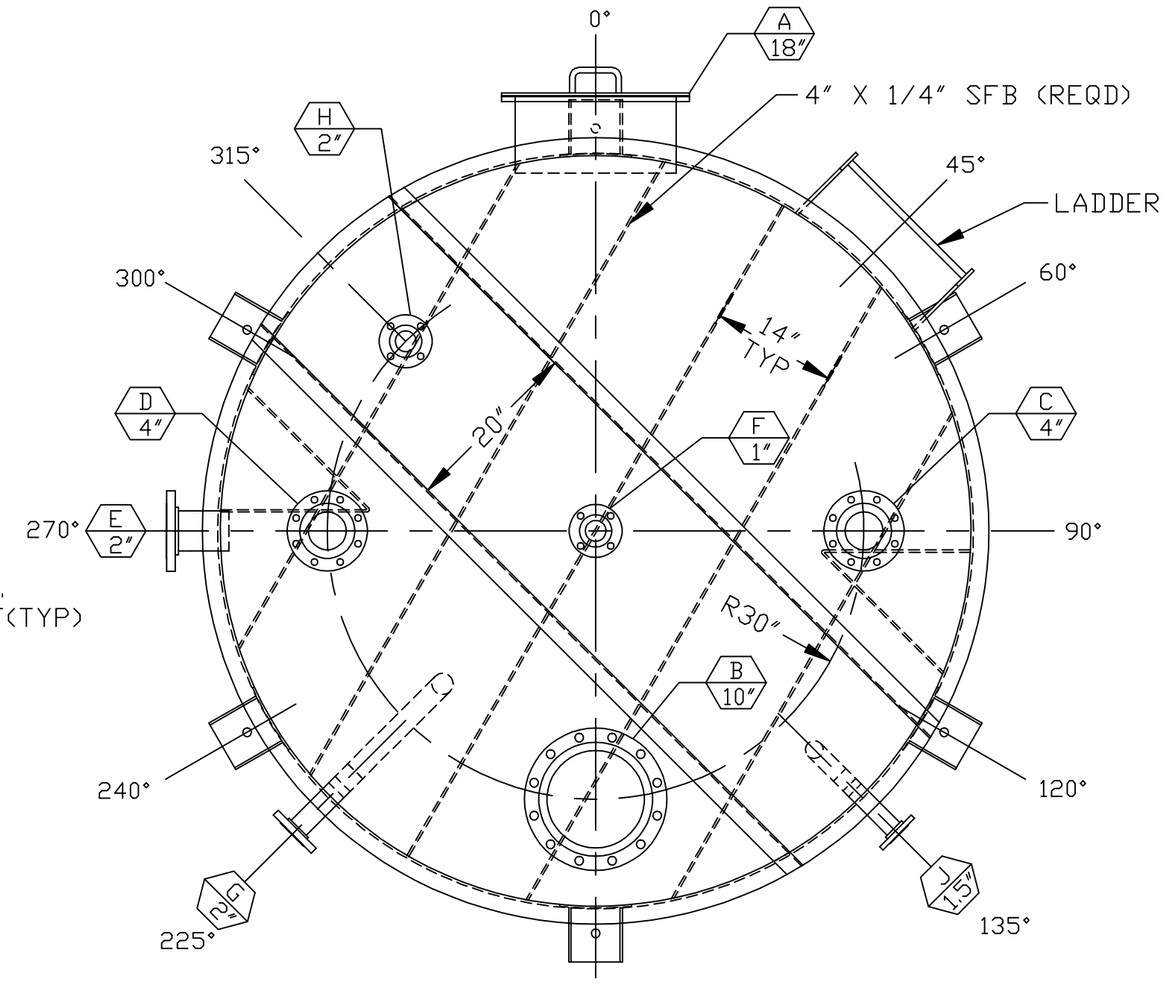

TANK ID TK-8

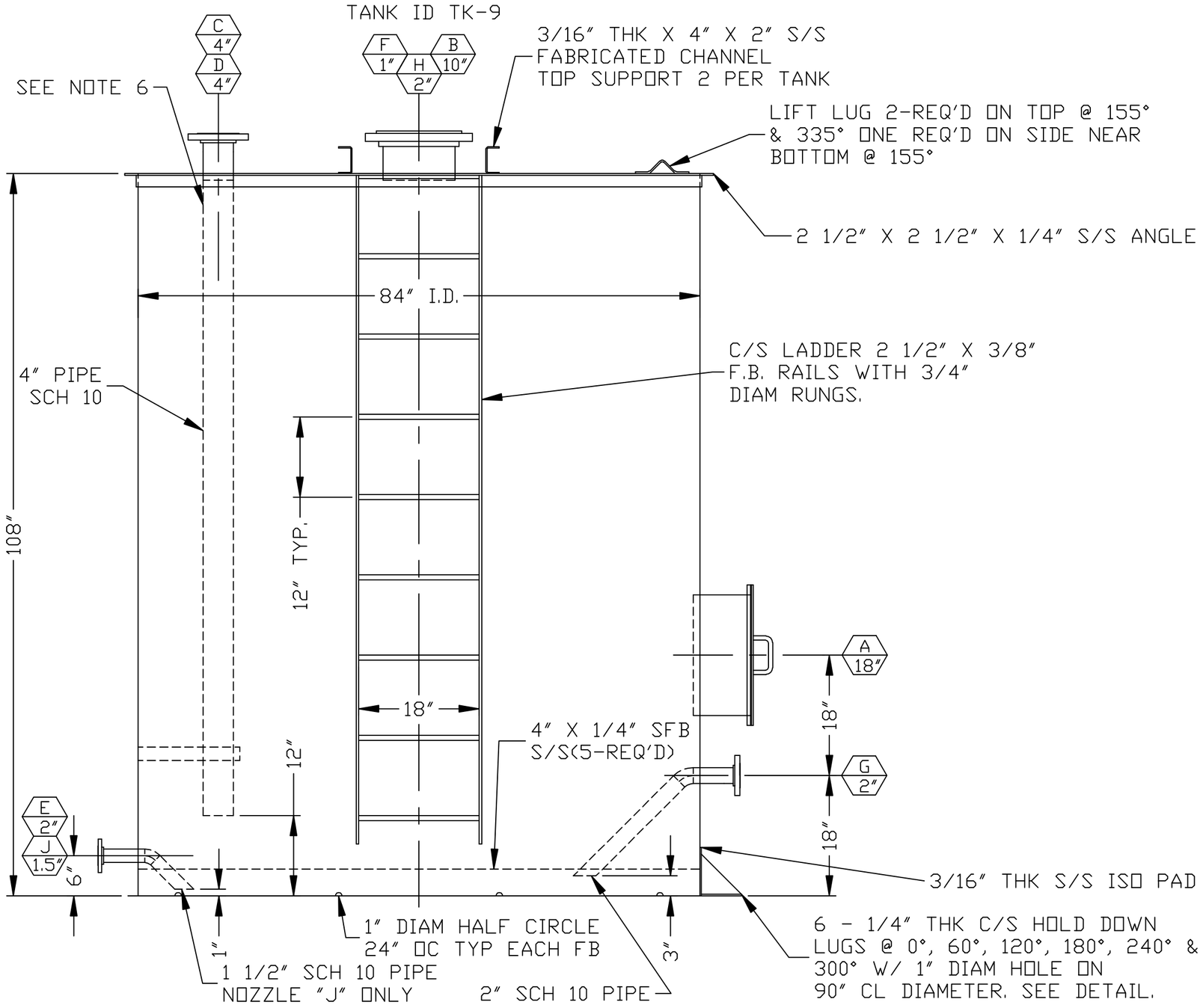

HOLD-DOWN LUG DETAIL

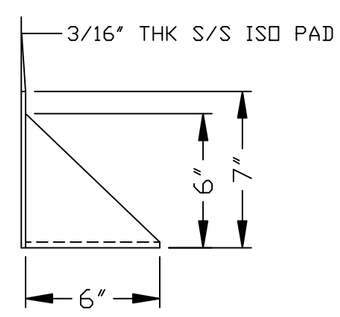

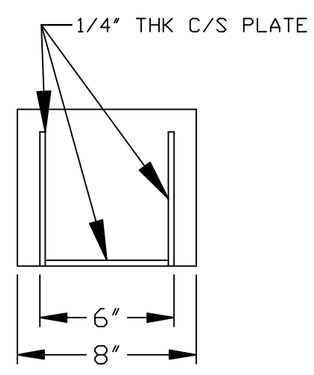

NOZZLE SCHEDULE

MK.	SIZE	QUAN.	NOZZLE TYPE	NOZZLE RATG	NOZZLE MAT'L	FLG. SCH.	NECK MAT'L	PROJ.	ORIENT.	SERVICE
A	18"	1	C/S MW API-650 CLAD					8"	0°	MANWAY
B	10	1	RFSO	150	304L	40	304L	4"	180°	VENT
C	4"	1	RFSO	150	304L	40	304L	4"	90°	INLET
D	4"	1	RFSO	150	304L	40	304L	4"	270°	STILL WELL
E	2"	1	RFSO	150	304L	40	304L	4"	*	EQUIL. TUBE
F	1"	1	RFSO	150	304L	40	304L	4"	TOP CTR	INLET(N2)
G	2"	1	RFSO	150	304L	40	304L	4"	*	OUTLET
H	2"	1	RFSO	150	304L	40	304L	4"	315°	VENT
J	1.5"	1	RFSO	150	304L	40	304L	4"	*	DRAIN

* SEE ORIENTATION VIEW

CERTIFIED AND MANUFACTURED BY:
Wolfe Mechanical and Equipment Co., Inc.
P.O. Box 276 – Lugoff, S.C. 29078 – Phone 803-438-1093

VESSEL:M.A.W.P. 0. 36 PSI@ 100 °F
JACKET:M.A.W.P. N/A PSI@ N/A °F
MFGRS SN: 3354 YR. BUILT 1997
MAT'L-VESSEL: T-304L JACKET: N/A
MAX.SP.GR. 1. 2 CAPACITY(GAL) 2500

DESIGN DATA

DESIGN CONDITIONS:
SHELL 0.36 PSIG 100 °F
JACKET N/A PSIG N/A °F
OPERATING CONDITIONS:
SHELL 0.36 PSIG 100 °F
JACKET N/A PSIG N/A °F
SPECIFIED CORROSION ALLOWANCE: 0.00"
CODE: API 650 STAMP: NONE
STRESS RELIEF: NONE RADIOGRAPH: NONE
TYPE HEADS:
SHELL FLAT
JACKET N/A
TYPE SUPPORT: N/A
JOINT EFF.:
VESSEL – HEAD 70% SHELL 70%
JACKET – HEAD N/A SHELL N/A
SHIPPING WT.: 3000 POUNDS TEST WT.: 25000 POUNDS
CAPACITY 2590 GALLONS
HYDROSTATIC TEST:
SHELL PER API-650 PSIG
JACKET N/A PSIG

MATERIALS

SHELL: VESSEL T-304L 3/16" THICK
JACKET N/A
HEADS: VESSEL T-304L 1/4" THICK
JACKET N/A
FLANGE SPEC.: T-304L
EXTERNAL PIPE SPEC.: T-304L
INTERNAL PIPE SPEC.: T-304L
CLADDING OR LINING SPEC.: T-304L
BOLTING: T-304 S/S
GASKETS: 1/8" PTFE ENVELOPE W/ EPDM FILLER
INTERNALS: T-304L
SUPPORTS: N/A
INSULATION: N/A
PAINTING: C/S 1 CT PRIMER & 1 CT GREY ENAMEL(LADDER YEL)

NOTES

1. COVER ALL FLANGES, OPENINGS AND MACHINED SURFACES PRIOR TO SHIPMENT UNLESS OTHERWISE NOTED.
2. NOZZLE BOLT HOLES SHALL STRADDLE 0-180 CENTERLINE OR ITS PARALLEL UNLESS OTHERWISE NOTED.
3. ALL INTERIOR WELDS TO BE GROUND CLEAN W/ 36 GRIT SOFT DISC.
4. EXTERIOR WELDS TO BE SANDBLASTED.
5. INTERIOR & EXTERIOR TO BE CLEANED & DESCALED WITH 10% PHOSPHORIC ACID AND RINSED WITH AMBIENT WATER.
6. DRILL 1" VENT HOLE NEAR TOP OF STILL WELL NOZZLE "D" ONLY.
7. ANCHOR BOLTS MUST BE CAPABLE OF WITHSTANDING 5399 POUNDS OF UPWARD FORCE.
8. ACCEPTABLE TANK UNDERCOATONGS/LININGS: BITUMASTIC COATING, NEOPRENE, FELT PAPER.

REVISION	DATE	
1	04/22/97	JBO
2	05/07/97	JBO

Wolfe Mechanical and Equipment Co., Inc.
Lugoff, South Carolina

SCALE: 3/4"=1'-0" APPROVED BY: DRAWN BY: WHK
DATE: 04/01/97 MATERIAL T-304L

2500 GALLON TANK

KINETICS

DRAWING NUMBER 3354